Cirrus Mini *Pro*

Surface mounted LED Luminaire SM200C

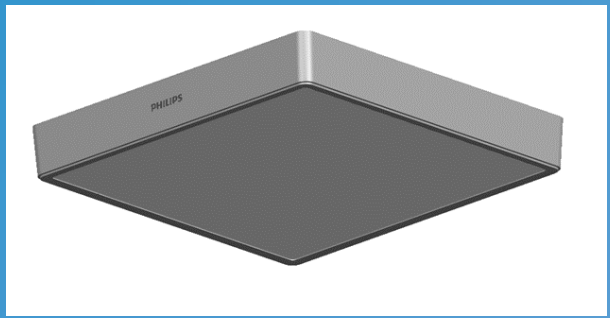

Sisesh Behuray
Product Marketing, Indoor
August 2016

PHILIPS

Contents

- Product Objective
- Product Applications
- Product Specifications
- Product Designation
- Product Ordering Data
- Product Installation instruction

PHILIPS

Product Objective

- To provide a LED solution for replacement of 2X18W & 2X26W CFL conventional surface mounted downlights.

Cirrus Mini *Pro*

General Lighting Solution form Indoor

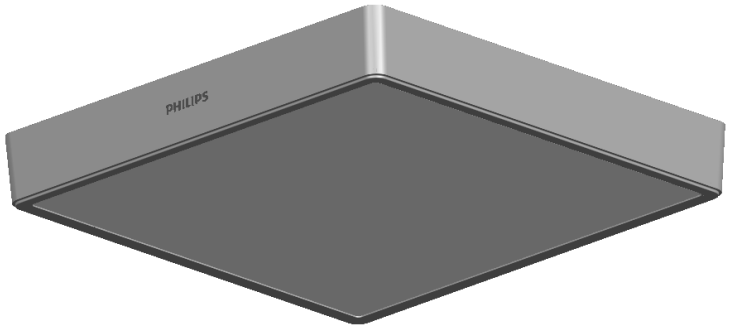

Key benefits:

- Led Lighting Solution for General Indoor Lighting replacing surface mounted 2x PLL-18watt , and 2xPL-C 26w
- Two Flux options : 1100 Lumen & 1600 Lumens
- Two Step Mounting : Easy to install and maintain.
- Maintenance free : Completely Isolated LED Compartment and Integral Construction.
- Pleasing Ambience : High CRI - 80 and SDCM < 5

Ideal solution for Indoor Areas

Government Building , Corridors, Staircase landing

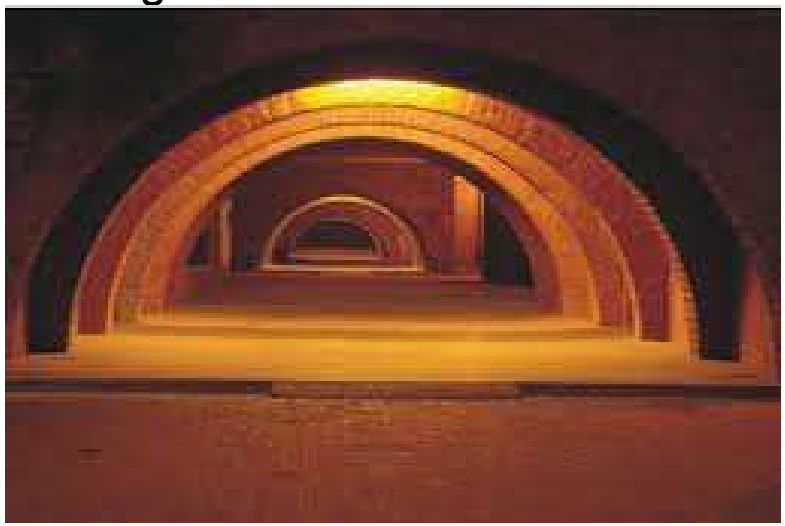

Cirrus Mini Pro

Specification

Make/Model	Philips 1X1-20W 1600 Lumen Cirrus mini Pro	Philips 1X1 -12 W 1100 Lumen Cirrus Mini Pro
Type Ref	SM200C LED16S 6500 PSU OD WH	SM200C LED11S 6500 PSU OD WH
	SM200C LED15S 4000 PSU OD WH	SM200C LED10S 4000 PSU OD WH
Dimension	312mmX312mmX45mm	312mmX312mmX45mm
Body Made of	PC/CRCA	PC/CRCA
Diffuser	Opal PMMA	Opal PMMA
Diffuser Opening	287X287 mm	287X287 mm
Rim Width	10mm	10mm
IP Rating	IP20	IP20
Fixture Color	White	White
Input/ Output Parameters		
Operating Voltage range	140-270V	140-270V
Frequency Range(Hz)	50-60Hz	50-60Hz
System Power Factor	>0.9	>0.9
Total Wattage(LED+ Driver)	20	12
Lumen/Watt	80	80
THD	THD<10%, Efficiency 85%	THD<10%, Efficiency 85%

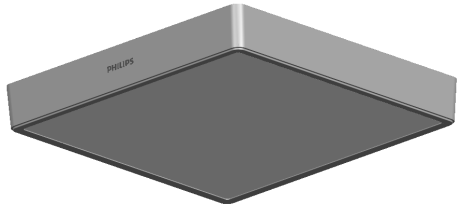

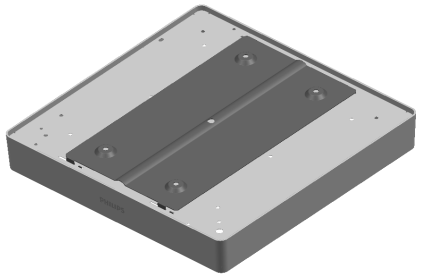

Cirrus Mini Pro- Product designation

SM200C	LED16S	6500	PSU	OD	WH
1	2	3	4	5	6

1. SM200C: Cirrus Mini pro luminaire for surface mounting	**5**. OD: Opal Diffuser
2. Light Engine & Lumen: 1600 lumen	**6**. WH: White
3. Color temperature: 6500K	
4. PSU – Electronic driver	

PHILIPS

Ordering Details

Ordering Code	Product description	Qty /Box	Spare Driver 12 NC
919515811036	SM200C LED16S 6500 PSU OD WH	2	4415 390 03605
919515811037	SM200C LED15S 4000 PSU OD WH	2	4415 390 03605
919515811344	SM200C LED11S 6500 PSU OD WH	2	4415 390 03756
919515811345	SM200C LED10S 4000 PSU OD WH	2	4415 390 03756

Product Dimensions

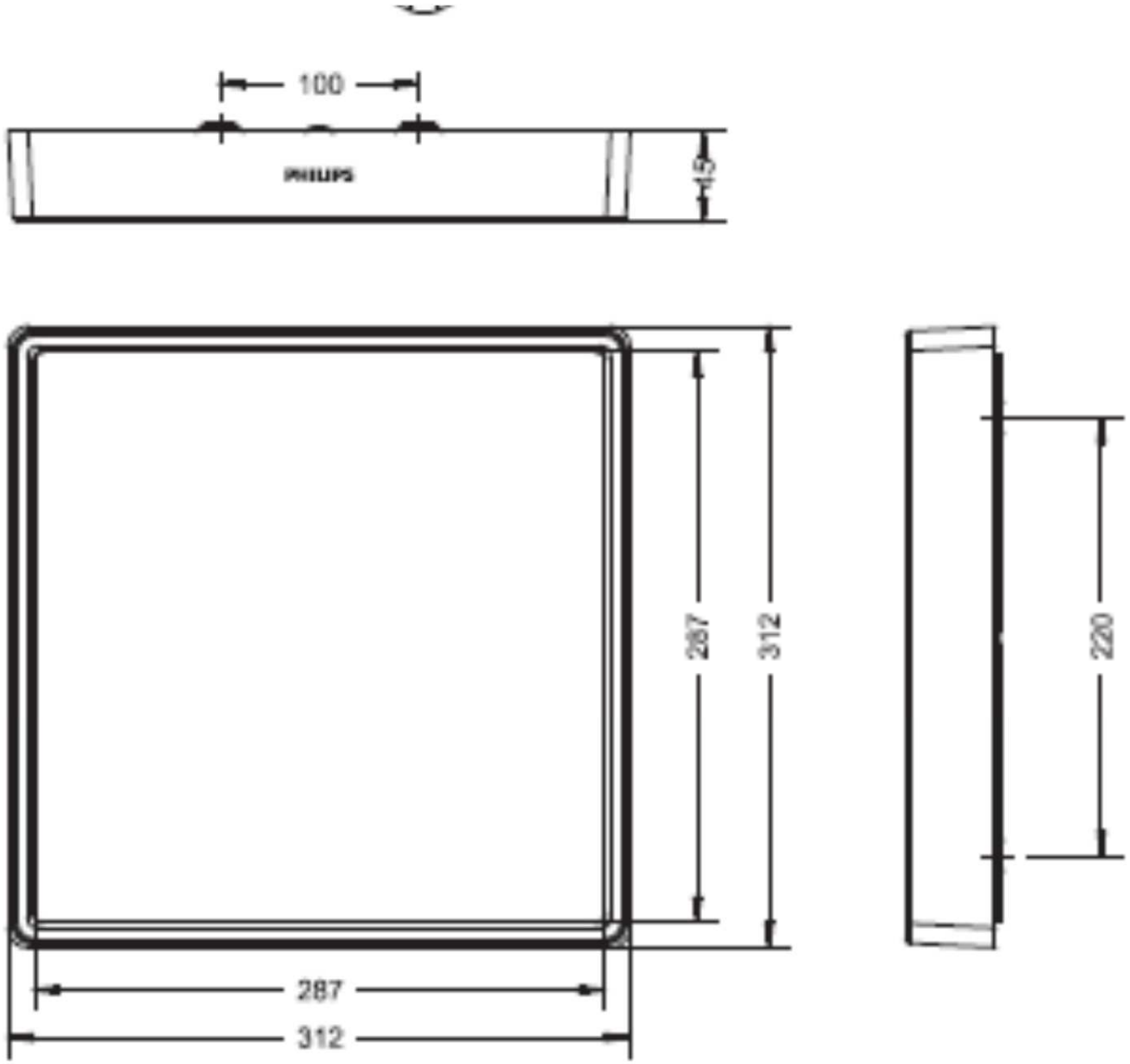

Installation Instructions

PHILIPS

CIRRUS MINI PRO

Surface

IEC 60598 | IP20 | NO INSULATION | INDOOR

THIS LUMINAIRE MUST BE EARTHED

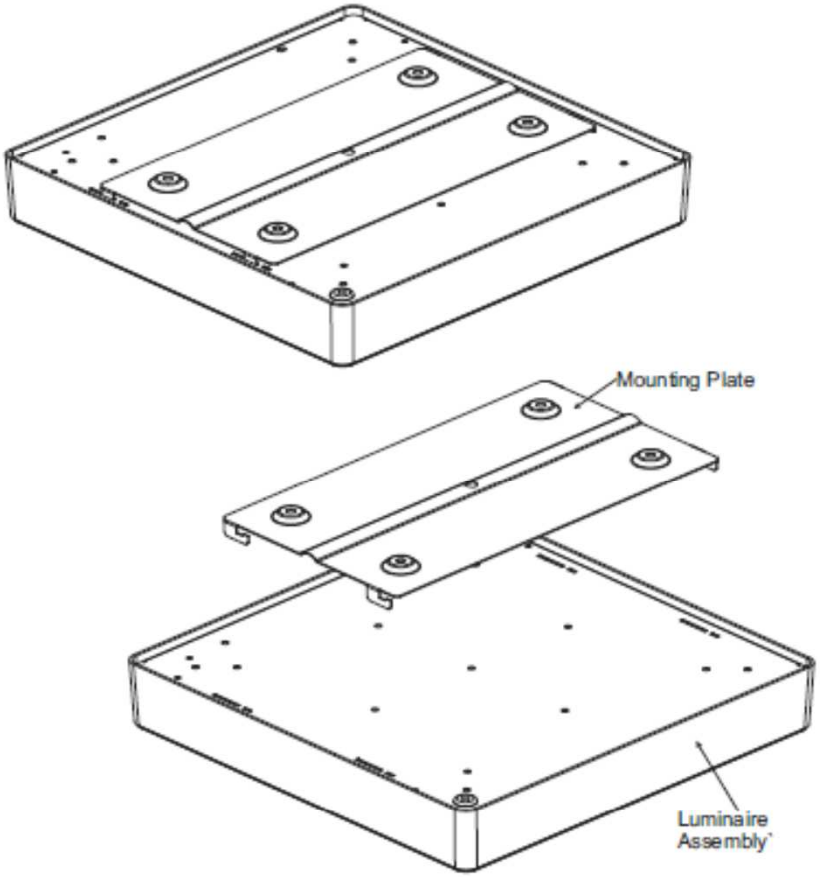

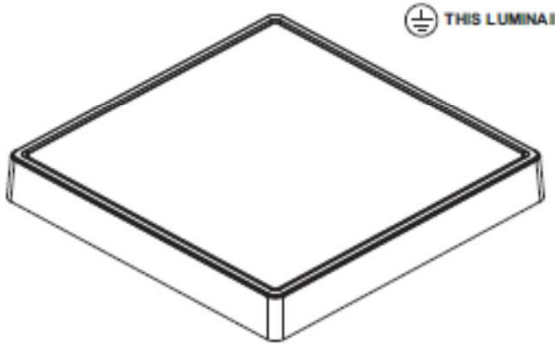

Product Dimensions

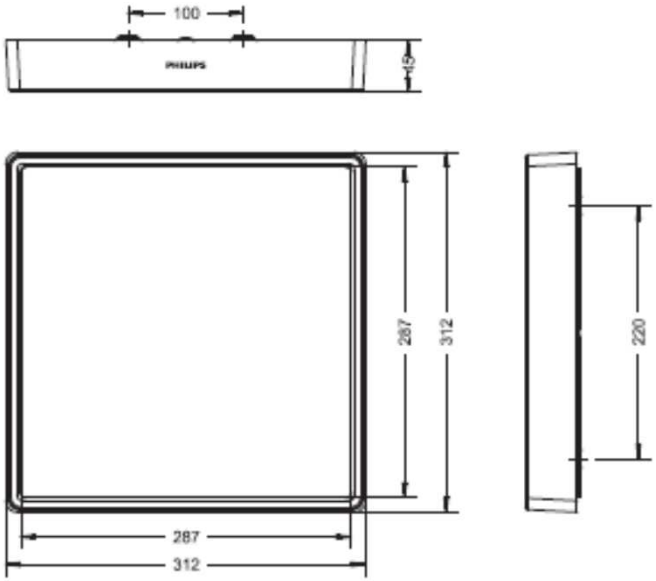

Tools required for installation :
1-Screw Driver
2-Measuring Tape
3-Drill Machine
4-Plastic Gloves

! ATTENTION: Install in accordance with national and local building and electrical codes.

PHILIPS

1 Detach Mounting plate from Luminaire

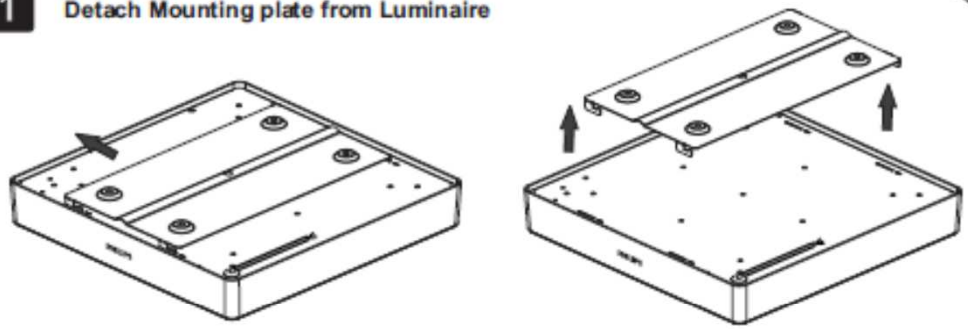

Slide mounting plate and lift it up so that it comes out of the Luminaire.

2 Fixing Mounting plate to ceiling

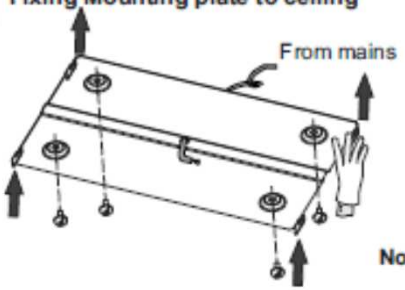

Note: Suggested screw size #8 x 1-1/2" for fixing Mounting plate to ceiling.

Mark and prepare the mounting position on the ceiling.
Fix the mounting plate with 4 screws.

3 Wiring connection

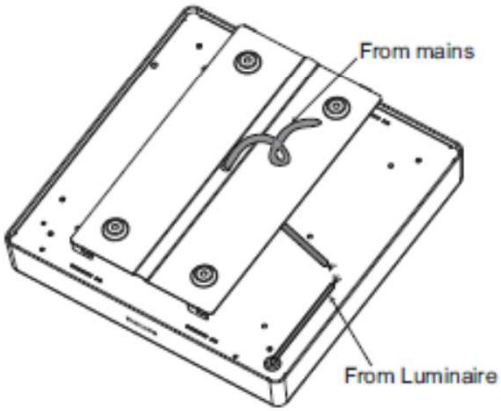

Connect the Mains wire (Live Neutral & Earth) to the L,N,E of wire coming from Luminaire side.

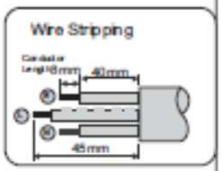

Caution: Cover all wire connections with electrical insulation tape.

4 Mount the Luminaire

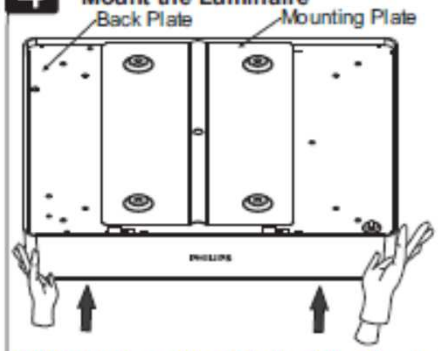

With PHILIPS word mark facing towards you, Match the hook in the mounting plate with the slot in the Back plate of Luminaire and push it upwards.

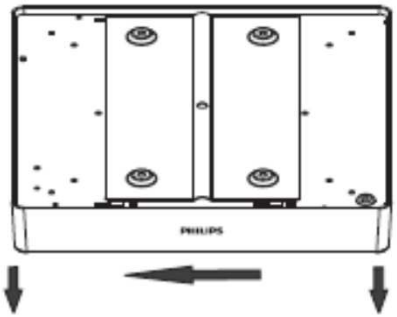

Slide the Luminaire towards left till the hook strikes the side wall of slot and Pull it down.

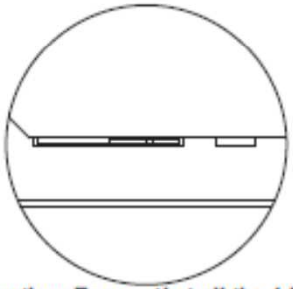

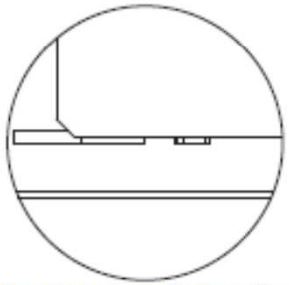

Caution: Ensure that all the 4 hooks on the Mounting plate are engaged with slots in the Luminaire properly. Check by Pulling Luminaire down.

Luminare is ready for operation.

PHILIPS